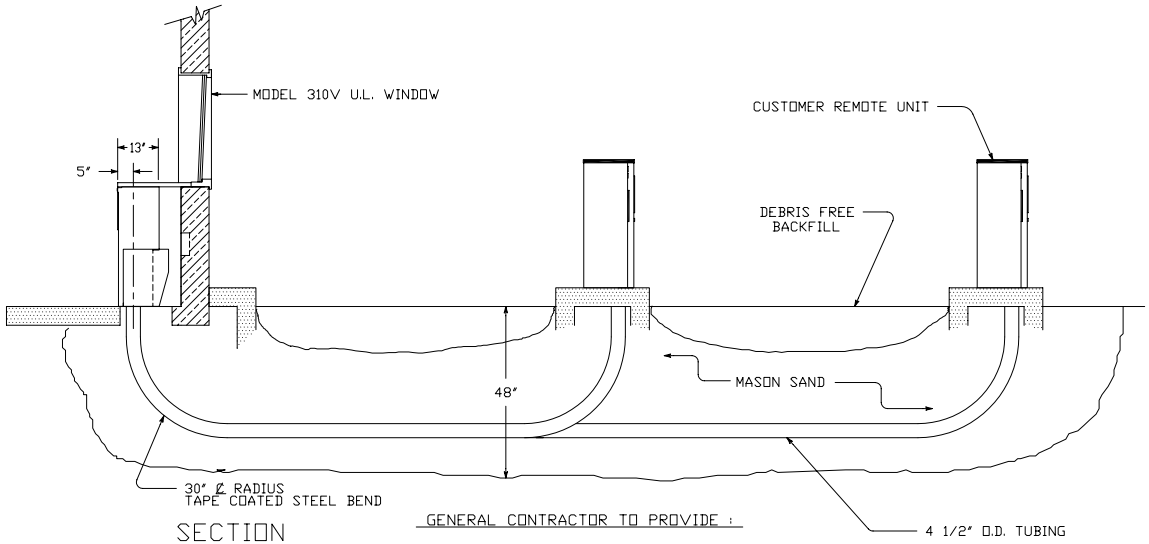

SECTION

GENERAL CONTRACTOR TO PROVIDE :

- TRENCH AS SHOWN WITH 6" SAND BASE
- LOCATION & INSTALLTION OF TEMPLATE
- 18" SAND BACKFILL OVER TUBES (SAND TO BE ON SITE PRIOR TO ARRIVAL OF TUBE INSTALLER)
- DEBRIS FREE BACKFILL OVER SAND AS REQUIRED
- ALL MASONRY OPENING & FINISH OF OPENING AFTER TUBE INSTALLATION
- ALL NECESSARY CONCRETE & MASONRY WORK
- ALL NECESSARY ELECTRICAL APPARATUS & WIRING AS PER DRAWING No. 99-352

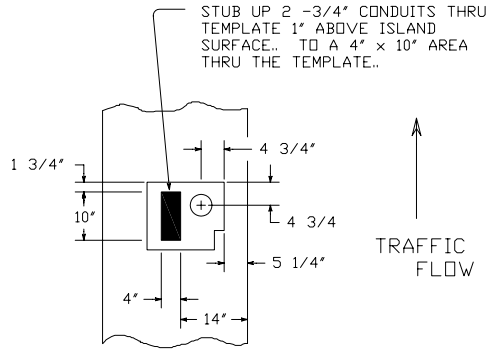

CUSTOMER UNIT TEMPLATE

(ALSO SEE DWG. 99-350)

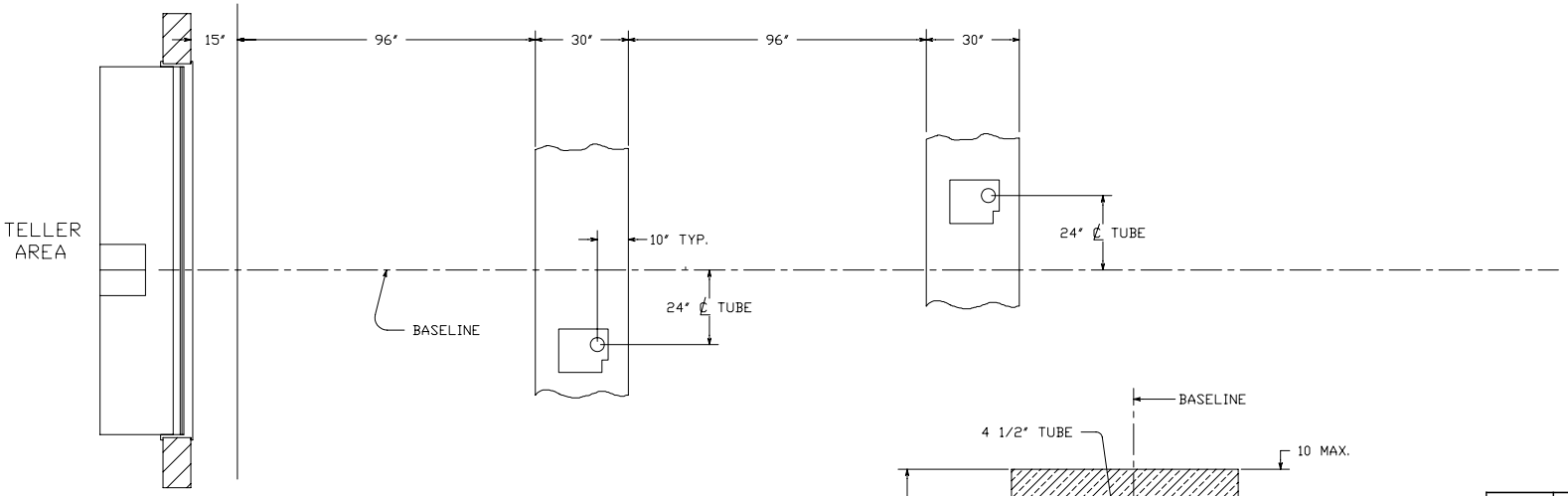

PLAN

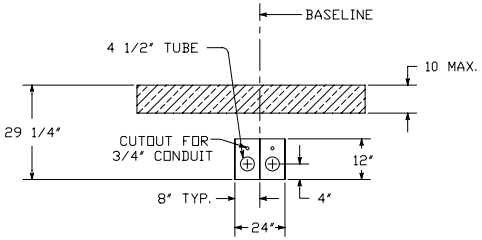

TELLER TEMPLATE

NOTE :

- SET ℄ OF TEMPLATE 1 ON BASELINE
- TEMPLATES BOLT TOGETHER FOR PROPER SPACING
- HOLD TEMPLATES SQUARE WITH WALL
- TOP OF METAL TEMPLATE TO BE SET AT FINISHED FLOOR GRADE

REV.-1	DATE:	
REV.-2	DATE:	
REV.-3	DATE:	

HAMILTON AIR

MODEL HA-1000-D

202 SYSTEM - ATM LANE

Drawing Number : 99-1050 | Date : 10/22/09